Optimising Antenna Installation for Public-Facing IoT

When customers are waiting to pay at a parking meter, charge their EV, or grab a snack from a vending machine, a reliable connection is essential. In public-facing IoT devices, connectivity issues can disrupt transactions, leading to delays and frustration.

Achieving consistent connectivity, however, depends on more than just the internal technology. A poorly installed antenna can result in dropped signals and slower performance. Proper antenna installation is key to ensuring reliable, uninterrupted service in demanding public environments.

The Pitfalls of Improper Installation

Improperly installed antennas—such as loose magnetic mounts or easily damaged whip antennas—are a common problem in public-facing IoT systems. These setups not only invite vandalism but also weaken signal quality, leading to transaction delays and inconsistent performance. Without careful attention to installation, even the best devices can fail to deliver the seamless experience users expect.

top view of public smart parcel locker with improperly moutned antennas

Why Secure Mounting Matters

Whether you're deploying a vending machine, smart parcel locker, or parking meter, the way you mount the antenna directly impacts its performance. Through-hole mounted antennas offer superior stability compared to magnetic mounts, reducing the risk of damage and ensuring your devices maintain a strong connection. A solid mounting approach not only protects the

antenna from tampering but also guarantees consistent, long-term performance.

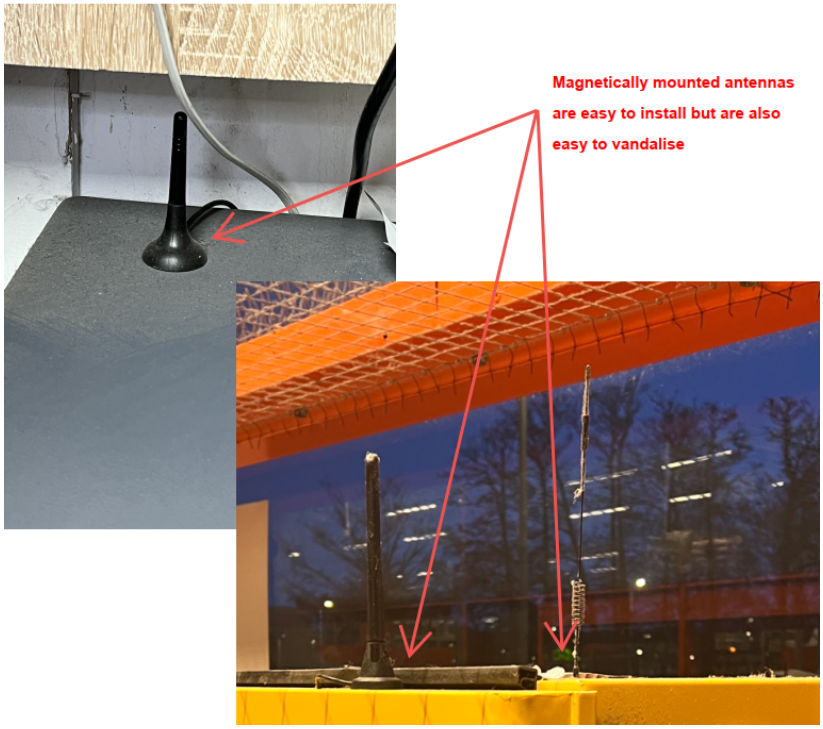

Custom RF Solutions for Enhanced Performance

Every public-facing IoT application has specific connectivity needs. Off-the-shelf antennas often fall short when precision is required. Siretta's bespoke RF antenna solutions are tailored to the unique demands of your project. Whether it's optimising cable length to minimise signal loss, customising the connector—such as using a right-angle version to prevent cable bending and further signal degradation—or deploying wide band, omni-directional antennas for strong connections in various environments, our solutions ensure reliable performance.

Reliable Connectivity Across Diverse Environments

From EV charging bays to smart ticketing machines and even digital signage, public IoT systems need dependable connectivity in both urban and remote locations. Siretta's wide band omni-directional antennas adapt to any network—whether 5G NR, 4G LTE, or Wi-Fi—ensuring that your devices consistently connect to the strongest available signal.

The Tango 44 antenna is an excellent example of a securely mounted, IP67-rated wide band omni-directional antenna, which has been successfully deployed in various public-facing IIoT applications. To ensure optimal installation, we provide a detailed guide covering everything from the required tools to the correct torque specifications for secure mounting, ensuring reliable performance in any environment.

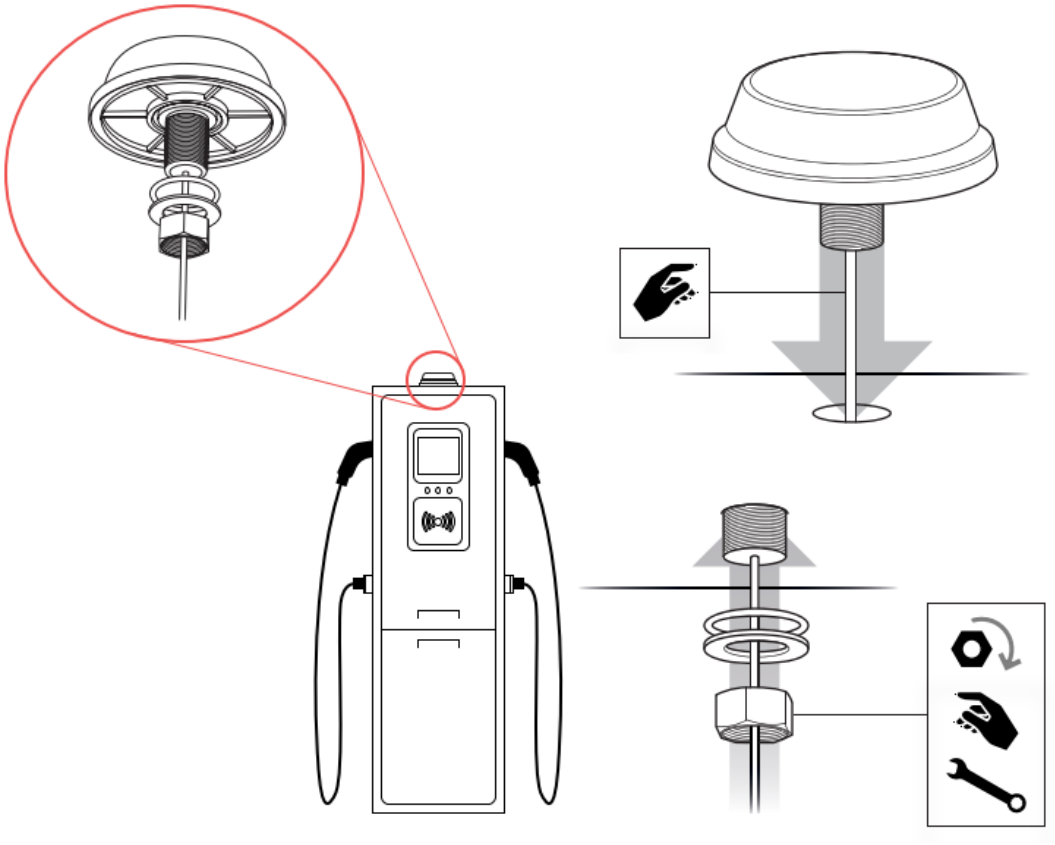

Accessible Custom Solutions

Custom solutions don't have to come with high costs. At Siretta, we offer low minimum order quantities starting at 100 units, making it possible for businesses of any size to access tailored RF solutions. Whether you're managing a small fleet of vending machines or rolling out a large-scale deployment of smart kiosks, we provide cost-effective solutions that meet your needs.

Future-Proof Your Connectivity

As IoT systems grow, so do the demands for high-performance connectivity. Choosing custom RF solutions today not only

solves immediate challenges but also prepares your devices for future IoT expansion.

Ready to enhance your public-facing IoT systems with reliable, customised RF solutions? Contact Siretta today at sales@siretta.com to design a solution that ensures robust and secure connectivity for years to come.

Siretta Ltd
Basingstoke Road
Spencers Wood
Reading
Berkshire RG7 1PW

sales +44(0)118 976 9000
email sales@siretta.com
web www.siretta.com