REV	DESCRIPTION	DRAWN	DATE

MMCX Male

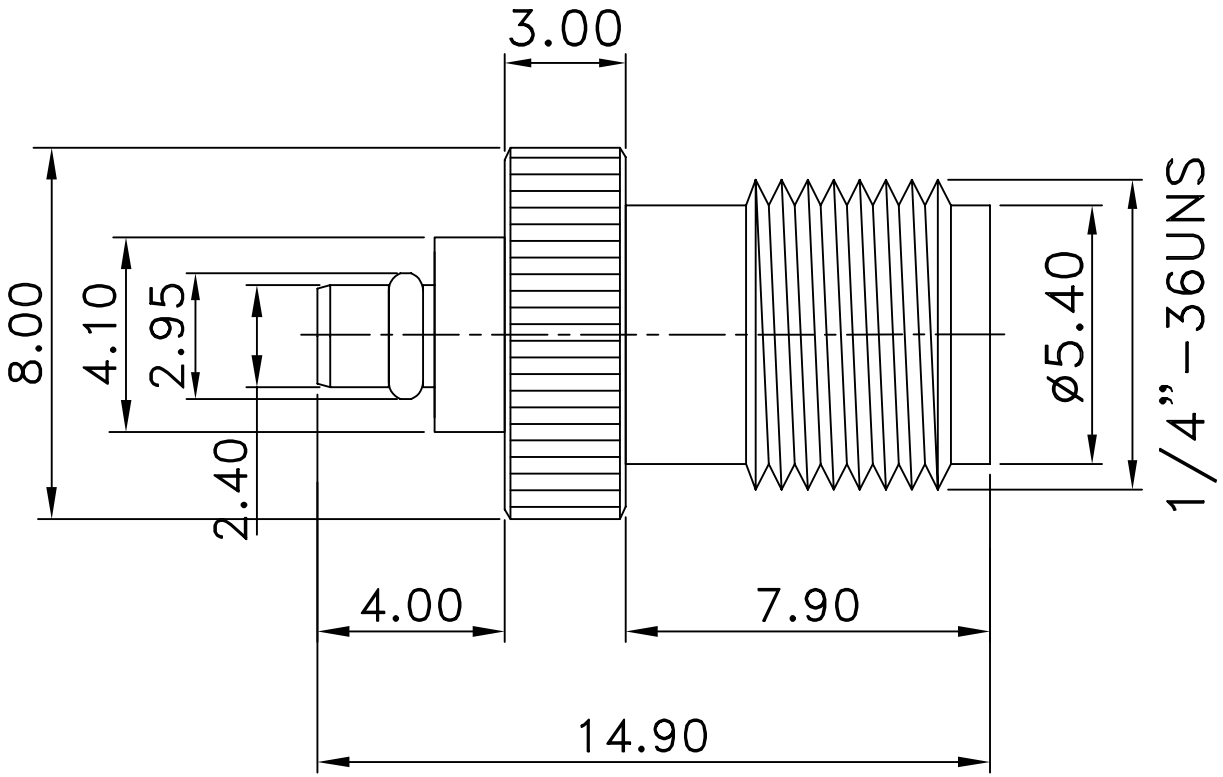

SMA Female

NO	Description	Q'ty	Material	Finish
4	INSULATOR	2	TEFLON	NONE
3	PIN	1	BRASS	GOLD
2	BODY	1	BRASS	GOLD
1	BODY	1	BRASS	GOLD

UNLESS OTHERWISE SPECIFIED
1. REMOVE ALL BURRS.
2. BREAK ALL CONNERS & EDGES CO.15 MAX.
3. CHAMFER 1ST & LAST THREADS 45°.
4. DIAMETERS ON COMMON CENTERS. TO BE CONCENTRIC WITHIN 0.1 T.I.R.
5. ALL DIMENSIONS ARE AFTER PLATING.

* MAJOR DIMENSION
UNLESS OTHERWISE NOTED TOLERANCES
0.5–6=±0.2
6–30=±0.4
30–120=±0.6
120–315=±1.0
ANGLES=±1°

SCALE 6/1 | UNIT MM

APPROVED HF
CHECKED HF
DRAWN Andrew
DRAWN DATE 03/06/10

Siretta
Enabling Industrial IoT

TITLE MMCX MALE TO SMA FEMALE
DRAWING NO. ADAPT/MMCXM/SMAF
REV A
FILE NO.